SHERLINE LATHE EXPLODED VIEW AND PART NUMBER LISTING

NOTE: Where different, Inch part number is given first, followed by Metric part number.

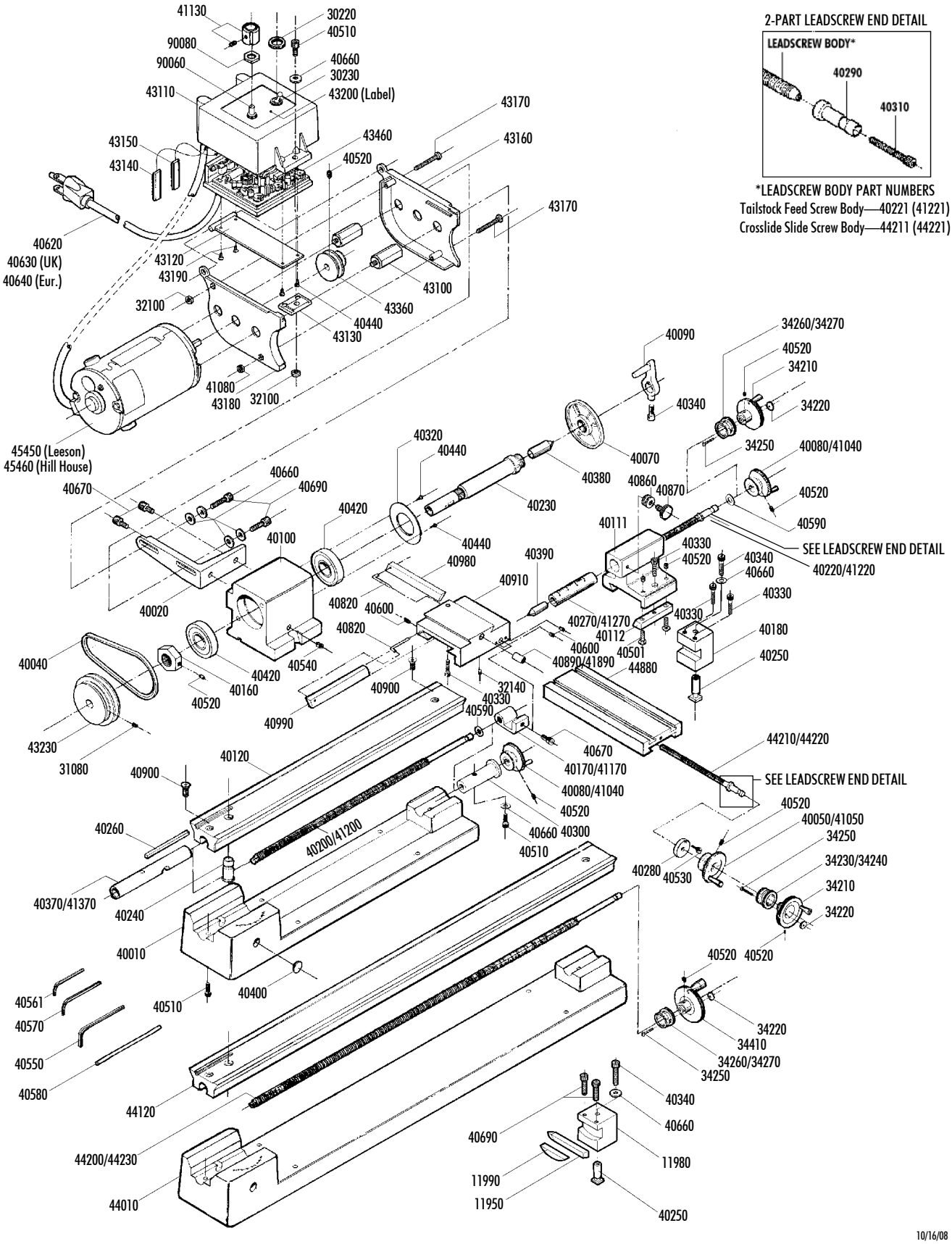

10/16/08